# HOT RHOD HEATER SUBMITTAL SHEET

## HRE SERIES ELECTRIC HEATERS

### SINGLE AND DUAL ELEMENT ELECTRIC INFRARED HEATERS

PROJECT ID: _____ ADDRESS: _____

PROJECT NAME: _____ _____

DATE: _____ CITY: _____ STATE: _____ ZIP: _____

Submitted By: _____ Address: _____

Company: _____ _____

Phone: _____ City: _____

Email: _____ State: _____ Zip: _____

Engineer: _____ Contractor: _____

Phone/Email: _____ Phone/Email: _____

Address: _____ Address: _____

City: _____ City: _____

State: _____ Zip: _____ State: _____ Zip: _____

## CHOOSING AN HRE MODEL

The HRE Series offers a variety of configurable options including housing color, length, voltage, wattage, and element type to fit a wide range of applications.

### VOLTAGE OPTIONS

The HRE Series is available in several voltages including 120, 208, 240, 277, 480, and 575 V. The voltage available to the space is an important consideration when determining which chassis and element type to select as voltage is directly related to wattage.

### CHASSIS OPTIONS

The HRE Series is available in four chassis lengths to accommodate a variety of mounting heights, heat coverage needs, and application types. Each chassis is available with a single or dual element, and features a black powder-coated marine grade aluminum housing.

### CUSTOMIZE THE LOOK

Optional trim kits are available for enhanced visual customization or added corrosion resistance.

**See trim add-on options on page 4.**

### AVAILABLE CHASSIS LENGTHS

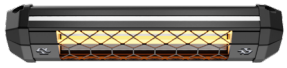

27” Chassis

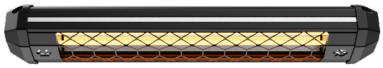

36” Chassis

49” Chassis

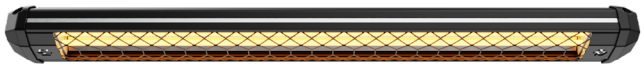

63” Chassis

DETROIT RADIANT PRODUCTS COMPANY

Detroit Radiant Products
21400 Hoover Rd.
Warren, MI 48089

Phone: (586) 756-0950
Email: sales@drp-co.com
www.reverberray.com

## MEDIUM WAVE MODELS

750 to 6,000 Watts

| | Model Number | Replacement Lamp | Voltage* | Total Amps | Total Watts | BTU/h | Weight |
|---|---|---|---|---|---|---|---|
| SINGLE ELEMENT MODELS | **HREM-27B1-120-.75** | EL-MW-A24 | 120 | 6.25 | 750 | 2,559 | 9.5 lbs. |
| | **HREM-27B1-208-.75** | EL-MW-B24 | 208 | 3.61 | 750 | 2,559 | 9.5 lbs. |
| | **HREM-27B1-240-.75** | EL-MW-C24 | 240 | 3.13 | 750 | 2,559 | 9.5 lbs. |
| | **HREM-27B1-277-.75** | EL-MW-D24 | 277 | 2.71 | 750 | 2,559 | 9.5 lbs. |
| | **HREM-36B1-120-1.25** | EL-MW-A33 | 120 | 10.42 | 1,250 | 4,265 | 14 lbs. |
| | **HREM-36B1-208-1.25** | EL-MW-B33 | 208 | 6.01 | 1,250 | 4,265 | 14 lbs. |
| | **HREM-36B1-240-1.25** | EL-MW-C33 | 240 | 5.21 | 1,250 | 4,265 | 14 lbs. |
| | **HREM-36B1-277-1.25** | EL-MW-D33 | 277 | 4.51 | 1,250 | 4,265 | 14 lbs. |
| | **HREM-49B1-208-2.0** | EL-MW-B46 | 208 | 9.62 | 2,000 | 6,824 | 16 lbs. |
| | **HREM-49B1-240-2.0** | EL-MW-C46 | 240 | 8.33 | 2,000 | 6,824 | 16 lbs. |
| | **HREM-49B1-277-2.0** | EL-MW-D46 | 277 | 7.22 | 2,000 | 6,824 | 16 lbs. |
| | **HREM-49B1-480-2.0** | EL-MW-G46 | 480 | 4.17 | 2,000 | 6,824 | 16 lbs. |
| | **HREM-49B1-575-2.0** | EL-MW-H46 | 575 | 3.48 | 2,000 | 6,824 | 16 lbs. |
| | **HREM-63B1-208-3.0** | EL-MW-B60-3.0 | 208 | 14.42 | 3,000 | 10,236 | 21 lbs. |
| | **HREM-63B1-240-3.0** | EL-MW-C60-3.0 | 240 | 12.50 | 3,000 | 10,236 | 21 lbs. |
| | **HREM-63B1-277-3.0** | EL-MW-D60-3.0 | 277 | 10.83 | 3,000 | 10,236 | 21 lbs. |
| DUAL ELEMENT MODELS | **HREM-27B2-120-1.5** | EL-MW-A24 | 120 | 12.50 | 1,500 | 5,118 | 11.5 lbs. |
| | **HREM-27B2-208-1.5** | EL-MW-B24 | 208 | 7.22 | 1,500 | 5,118 | 11.5 lbs. |
| | **HREM-27B2-240-1.5** | EL-MW-C24 | 240 | 6.25 | 1,500 | 5,118 | 11.5 lbs. |
| | **HREM-27B2-277-1.5** | EL-MW-D24 | 277 | 5.42 | 1,500 | 5,118 | 11.5 lbs. |
| | **HREM-36B2-120-2.5** | EL-MW-A33 | 120 | 20.83 | 2,500 | 8,530 | 17 lbs. |
| | **HREM-36B2-208-2.5** | EL-MW-B33 | 208 | 12.02 | 2,500 | 8,530 | 17 lbs. |
| | **HREM-36B2-240-2.5** | EL-MW-C33 | 240 | 10.42 | 2,500 | 8,530 | 17 lbs. |
| | **HREM-36B2-277-2.5** | EL-MW-D33 | 277 | 9.03 | 2,500 | 8,530 | 17 lbs. |
| | **HREM-49B2-208-4.0** | EL-MW-B46 | 208 | 19.23 | 4,000 | 13,648 | 20 lbs. |
| | **HREM-49B2-240-4.0** | EL-MW-C46 | 240 | 16.67 | 4,000 | 13,648 | 20 lbs. |
| | **HREM-49B2-277-4.0** | EL-MW-D46 | 277 | 14.44 | 4,000 | 13,648 | 20 lbs. |
| | **HREM-49B2-480-4.0** | EL-MW-G46 | 480 | 8.33 | 4,000 | 13,648 | 20 lbs. |
| | **HREM-49B2-575-4.0** | EL-MW-H46 | 575 | 6.96 | 4,000 | 13,648 | 20 lbs. |
| | **HREM-63B2-208-6.0** | EL-MW-B60-3.0 | 208 | 28.85 | 6,000 | 20,472 | 25 lbs. |
| | **HREM-63B2-240-6.0** | EL-MW-C60-3.0 | 240 | 25.00 | 6,000 | 20,472 | 25 lbs. |
| | **HREM-63B2-277-6.0** | EL-MW-D60-3.0 | 277 | 21.66 | 6,000 | 20,472 | 25 lbs. |

* Heaters are configured at the factory for single phase wiring. If three phase service is desired, it must be wired as such in the field by a trained installer / electrical contractor.

## HIGH OUTPUT MEDIUM WAVE MODELS

1,360 to 8,000 Watts

| | Model Number | Replacement Lamp | Voltage* | Total Amps | Total Watts | BTU/h | Weight |
|---|---|---|---|---|---|---|---|
| SINGLE ELEMENT MODELS | **HRET-27B1-120-1.36** | EL-HO-A24 | 120 | 11.33 | 1,360 | 4,641 | 9.5 lbs. |
| | **HRET-27B1-208-1.36** | EL-HO-B24 | 208 | 6.54 | 1,360 | 4,641 | 9.5 lbs. |
| | **HRET-27B1-240-1.36** | EL-HO-C24 | 240 | 5.67 | 1,360 | 4,641 | 9.5 lbs. |
| | **HRET-27B1-277-1.36** | EL-HO-D24 | 277 | 4.91 | 1,360 | 4,641 | 9.5 lbs. |
| | **HRET-27B1-480-1.36** | EL-HO-G24 | 480 | 2.83 | 1,360 | 4,641 | 9.5 lbs. |
| | **HRET-36B1-208-2.0** | EL-HO-B33-2.0 | 208 | 9.62 | 2,000 | 6,824 | 14 lbs. |
| | **HRET-36B1-240-2.0** | EL-HO-C33-2.0 | 240 | 8.33 | 2,000 | 6,824 | 14 lbs. |
| | **HRET-36B1-277-2.0** | EL-HO-D33-2.0 | 277 | 7.22 | 2,000 | 6,824 | 14 lbs. |
| | **HRET-36B1-480-2.0** | EL-HO-G33-2.0 | 480 | 4.17 | 2,000 | 6,824 | 14 lbs. |
| | **HRET-36B1-208-2.13** | EL-HO-B33 | 208 | 10.22 | 2,125 | 7,251 | 14 lbs. |
| | **HRET-36B1-240-2.13** | EL-HO-C33 | 240 | 8.85 | 2,125 | 7,251 | 14 lbs. |
| | **HRET-36B1-277-2.13** | EL-HO-D33 | 277 | 7.67 | 2,125 | 7,251 | 14 lbs. |
| | **HRET-36B1-480-2.13** | EL-HO-G33 | 480 | 4.43 | 2,125 | 7,251 | 14 lbs. |
| | **HRET-49B1-240-3.0** | EL-HO-C46-3.0 | 240 | 12.50 | 3,000 | 10,236 | 16 lbs. |
| | **HRET-49B1-277-3.0** | EL-HO-D46-3.0 | 277 | 10.83 | 3,000 | 10,236 | 16 lbs. |
| | **HRET-49B1-480-3.0** | EL-HO-G46-3.0 | 480 | 6.25 | 3,000 | 10,236 | 16 lbs. |
| | **HRET-49B1-277-3.2** | EL-HO-D46 | 277 | 11.55 | 3,200 | 10,919 | 16 lbs. |
| | **HRET-49B1-480-3.2** | EL-HO-G46 | 480 | 6.66 | 3,200 | 10,919 | 16 lbs. |
| | **HRET-49B1-575-3.2** | EL-HO-H46 | 575 | 5.56 | 3,200 | 10,919 | 16 lbs. |
| | **HRET-63B1-277-3.25** | EL-HO-D60-3.25 | 277 | 11.73 | 3,250 | 11,090 | 21 lbs. |
| | **HRET-63B1-480-3.25** | EL-HO-G60-3.25 | 480 | 6.77 | 3,250 | 11,090 | 21 lbs. |
| | **HRET-63B1-480-4.0** | EL-HO-G60 | 480 | 8.33 | 4,000 | 13,648 | 21 lbs. |
| | **HRET-63B1-575-4.0** | EL-HO-H60 | 575 | 6.96 | 4,000 | 13,648 | 21 lbs. |
| DUAL ELEMENT MODELS | **HRET- 27B2-120-2.72** | EL-HO-A24 | 120 | 22.67 | 2,720 | 9,281 | 11.5 lbs. |
| | **HRET- 27B2-208-2.72** | EL-HO-B24 | 208 | 13.08 | 2,720 | 9,281 | 11.5 lbs. |
| | **HRET- 27B2-240-2.72** | EL-HO-C24 | 240 | 11.33 | 2,720 | 9,281 | 11.5 lbs. |
| | **HRET- 27B2-277-2.72** | EL-HO-D24 | 277 | 9.82 | 2,720 | 9,281 | 11.5 lbs. |
| | **HRET- 27B2-480-2.72** | EL-HO-G24 | 480 | 5.67 | 2,720 | 9,281 | 11.5 lbs. |
| | **HRET- 36B2-208-4.0** | EL-HO-B33-2.0 | 208 | 19.23 | 4,000 | 13,648 | 17 lbs. |
| | **HRET- 36B2-240-4.0** | EL-HO-C33-2.0 | 240 | 16.67 | 4,000 | 13,648 | 17 lbs. |
| | **HRET- 36B2-277-4.0** | EL-HO-D33-2.0 | 277 | 14.44 | 4,000 | 13,648 | 17 lbs. |
| | **HRET- 36B2-480-4.0** | EL-HO-G33-2.0 | 480 | 8.33 | 4,000 | 13,648 | 17 lbs. |
| | **HRET- 36B2-208-4.25** | EL-HO-B33 | 208 | 20.43 | 4,250 | 14,501 | 17 lbs. |
| | **HRET- 36B2-240-4.25** | EL-HO-C33 | 240 | 17.71 | 4,250 | 14,501 | 17 lbs. |
| | **HRET- 36B2-277-4.25** | EL-HO-D33 | 277 | 15.34 | 4,250 | 14,501 | 17 lbs. |
| | **HRET- 36B2-480-4.25** | EL-HO-G33 | 480 | 8.85 | 4,250 | 14,501 | 17 lbs. |
| | **HRET- 49B2-240-6.0** | EL-HO-C46-3.0 | 240 | 25.00 | 6,000 | 20,472 | 20 lbs. |
| | **HRET- 49B2-277-6.0** | EL-HO-D46-3.0 | 277 | 21.66 | 6,000 | 20,472 | 20 lbs. |
| | **HRET- 49B2-480-6.0** | EL-HO-G46-3.0 | 480 | 12.50 | 6,000 | 20,472 | 20 lbs. |
| | **HRET- 49B2-575-6.0** | EL-MW-H46 | 575 | 10.43 | 6,000 | 20,472 | 20 lbs. |
| | **HRET- 49B2-277-6.4** | EL-HO-D46 | 277 | 23.10 | 6,400 | 21,837 | 20 lbs. |
| | **HRET- 49B2-480-6.4** | EL-HO-G46 | 480 | 13.33 | 6,400 | 21,837 | 20 lbs. |
| | **HRET- 49B2-575-6.4** | EL-HO-H46 | 575 | 11.13 | 6,400 | 21,837 | 20 lbs. |
| | **HRET-63B2-277-6.5** | EL-HO-D60-3.25 | 277 | 23.47 | 6,500 | 22,178 | 25 lbs. |
| | **HRET-63B2-480-6.5** | EL-HO-G60-3.25 | 480 | 13.54 | 6,500 | 22,178 | 25 lbs. |
| | **HRET-63B2-480-8.0** | EL-HO-G60 | 480 | 16.67 | 8,000 | 27,296 | 25 lbs. |
| | **HRET-63B2-575-8.0** | EL-HO-H60 | 575 | 13.91 | 8,000 | 27,296 | 25 lbs. |

* Heaters are configured at the factory for single phase wiring. If three phase service is desired, it must be wired as such in the field by a trained installer / electrical contractor.

## FEATURED SPECIFICATIONS

### APPROVALS
- UL Listed
- Indoor & Outdoor Commercial/Industrial Approval
- Outdoor Residential Approval

### HEATER CONSTRUCTION
- Black powder-coat marine grade aluminum housing
- Optional add-on trim kits
- High temperature louvered nylon end caps

### LAMP ELEMENTS
- Single or dual element design featuring standard medium wave and high-output medium wave element options
- Coiled tungsten filament housed within a sealed quartz tubing
- Instantaneous heat-up and cool-down

### ELECTRICAL SUPPLY
- Voltages from 120 to 575 VAC
- Single-phase (can be wired in field as three-phase)
- 750 to 4,000 W per element

### CONTROLS
- Field supplied

### MOUNTING
- 0° to 30° adjustable brackets

### REFLECTORS
- Polished aluminum reflectors efficiently direct radiant heat
- Wide, symmetric design

### LIMITED WARRANTY
- 1 year–All components

*Please contact the factory for further information on the terms and conditions.*

## TRIM KIT ADD-ONS

Optional trim kit add-ons allow the HRE Series to better coordinate with the surrounding design aesthetic. Standard units include aluminum trim pieces on the sides, ends, and egg crate logos, while black, red, blue, and gold trim kits provide added visual customization. For coastal or corrosion-prone environments, the 316 marine grade stainless steel add-on upgrades both the trim pieces and egg crate. **Trim kit add-ons must be ordered at the time of heater manufacture.**

**ALUMINUM TRIM**

**Default - No Add-On Required**

**BLACK TRIM KIT**

☐ **HRE-TK-BK**

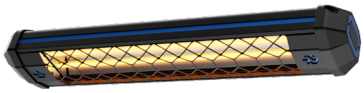

**BLUE TRIM KIT**

☐ **HRE-TK-BL**

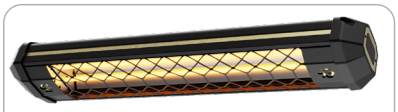

**GOLD TRIM KIT**

☐ **HRE-TK-GL**

**RED TRIM KIT**

☐ **HRE-TK-RD**

**316 MARINE GRADE SS TRIM KIT**

☐ **HRE-TK-MG**

## OPTIONAL ACCESSORIES

| | |
|---|---|
| ☐ **HRE-RM-27B1** | Black finish recessed mount—fits 27” chassis |
| ☐ **HRE-RM-36B1** | Black finish recessed mount—fits 36” chassis |
| ☐ **HRE-RM-49B1** | Black finish recessed mount—fits 49” chassis |
| ☐ **HRE-RM-63B1** | Black finish recessed mount—fits 63” chassis |
| ☐ **HRE-RM-27S1** | Stainless steel recessed mount—fits 27” chassis |
| ☐ **HRE-RM-36S1** | Stainless steel recessed mount—fits 36” chassis |
| ☐ **HRE-RM-49S1** | Stainless steel recessed mount—fits 49” chassis |
| ☐ **HRE-RM-63S1** | Stainless steel recessed mount—fits 63” chassis |

**DETROIT RADIANT**
PRODUCTS COMPANY

Detroit Radiant Products
21400 Hoover Rd.
Warren, MI 48089

Phone: (586) 756-0950
Email: sales@drp-co.com
www.reverberray.com

# HOT RHOD SAFETY SUBMITTAL SHEET

## HRE SERIES CLEARANCES TO COMBUSTIBLES

**All listed clearances to combustibles are in inches.**

| Model | | Mounting Angle* | Side: Front | Side: Behind | End | Top | Below | Min. Mtg. Height US | Min. Mtg. Height Canada |
|---|---|---|---|---|---|---|---|---|---|
| 27” 36” | HREM | 0° | 17 (432) | 17 (432) | 10 (254) | 6 (153) | 48 (1220) | 6 ft. | 2.4 m |
| | | 30° | 31 (788) | 4 (102) | 10 (254) | 7 (178) | 42 (1067) | | |
| | HRET | 0° | 27 (686) | 27 (686) | 14 (356) | 9 (229) | 48 (1220) | | |
| | | 30° | 34 (864) | 7 (178) | 14 (356) | 9 (229) | 48 (1220) | | |
| 49” | HREM | 0° | 17 (432) | 17 (432) | 10 (254) | 6 (153) | 48 (1220) | 7 ft. | 2.4 m |
| | | 30° | 31 (788) | 4 (102) | 10 (254) | 7 (178) | 42 (1067) | | |
| | HRET | 0° | 30 (762) | 30 (762) | 14 (356) | 9 (229) | 61 (1550) | | |
| | | 30° | 42 (1067) | 7 (178) | 14 (356) | 9 (229) | 61 (1550) | | |
| 63” | HREM | 0° | 21 (534) | 21 (534) | 10 (254) | 6 (153) | 48 (1220) | 8 ft. | 2.4 m |
| | | 30° | 31 (788) | 4 (102) | 10 (254) | 7 (178) | 42 (1067) | | |
| | HRET | 0° | 33 (839) | 33 (839) | 14 (356) | 8 (204) | 61 (1550) | | |
| | | 30° | 49 (1245) | 9 (229) | 14 (356) | 8 (204) | 61 (1550) | | |

* Heaters mounted on an angle between 0° and 30° must maintain clearances posted for 0° or 30°, whichever is greater.

** Clearances to combustibles must be maintained when using recessed mount kits (P/N: HRE-RM-XXXX). For additional information, refer to form # LSH123c - Recessed Mounting Frame Installation Instructions or contact the factory.

**NOTE:** Ensure that building materials with a low heat tolerance (i.e, awnings, fabrics, plastics, sprinklers, insulation, etc.) are protected against degradation. This may require the heater to be mounted at a distance in excess of the published clearances to combustibles. Contact the material manufacturer for specific details.

**TOP VIEW**
**0° Mounting Angle**

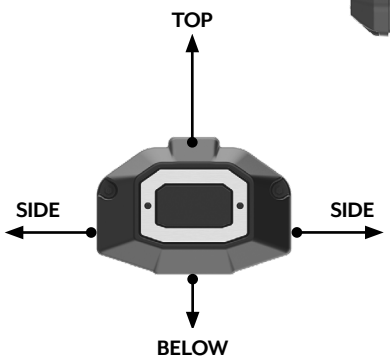


**END VIEW**
**0° Mounting Angle**

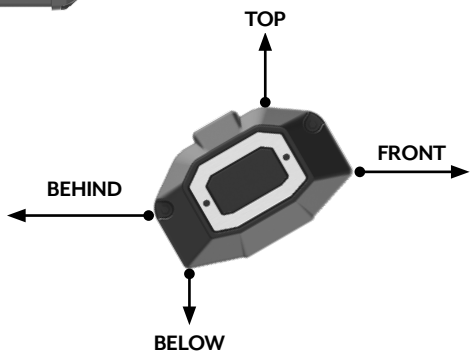


**END VIEW**
**30° Mounting Angle**

Read and understand the installation, operation, and maintenance manual prior to installing or servicing this unit.

In locations used for the storage of combustible materials, signs must be posted adjacent to the heater’s thermostat specifying stacking heights.

**DETROIT RADIANT** PRODUCTS COMPANY

Detroit Radiant Products
21400 Hoover Rd.
Warren, MI 48089

Phone: (586) 756-0950
Email: sales@drp-co.com
www.reverberray.com

# HOT RHOD DIMENSIONAL SUBMITTAL SHEET

## HRE SERIES DIMENSIONS

### Drawing NTS

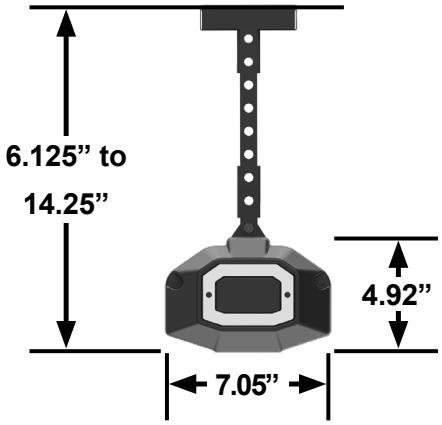


**HRE 27” Models**

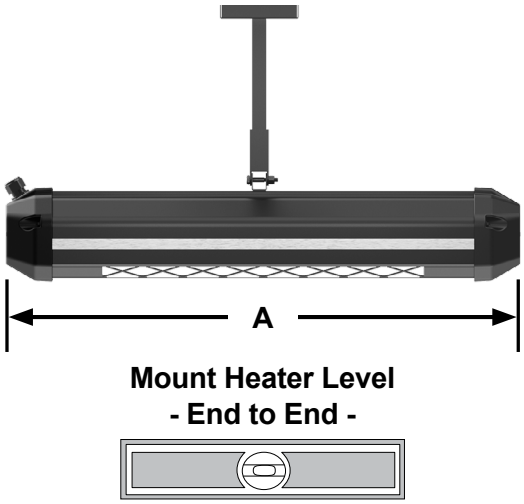


**HRE 36”, 49”, & 63” Models**

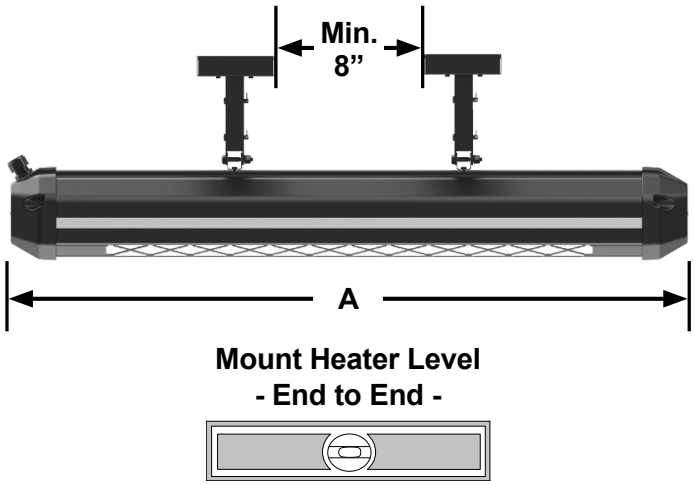


| MODEL NO. | A |
|---|---|
| HRE[M,T]-27B[1,2] | 27.20 |
| HRE[M,T]-36B[1,2] | 36.20 |
| HRE[M,T]-49B[1,2] | 49.20 |
| HRE[M,T]-63B[1,2] | 63.20 |

DETROIT RADIANT
PRODUCTS COMPANY
Detroit Radiant Products
21400 Hoover Rd.
Warren, MI 48089
Phone: (586) 756-0950
Email: sales@drp-co.com
www.reverberray.com

# HOT RHOD WIRING SUBMITTAL SHEET

## HRE SERIES WIRING DIAGRAMS

### Wiring Diagram for Single Element Models

### Wiring Diagram for Dual Element Models

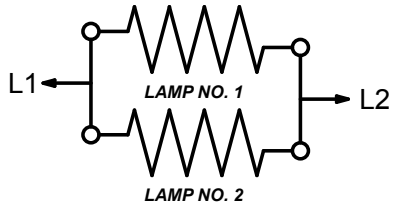


### Single Phase Service

Heaters are built as single phase.

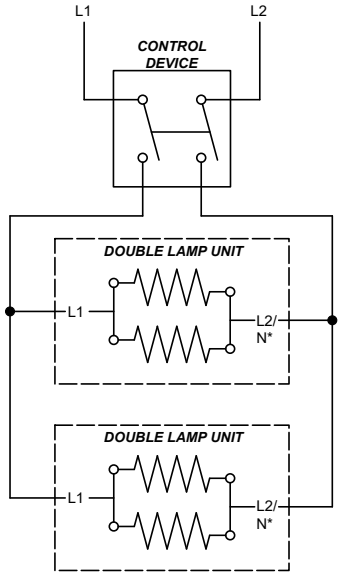


*N for 120 V and 277 V

### Three Phase Service

Field configured.

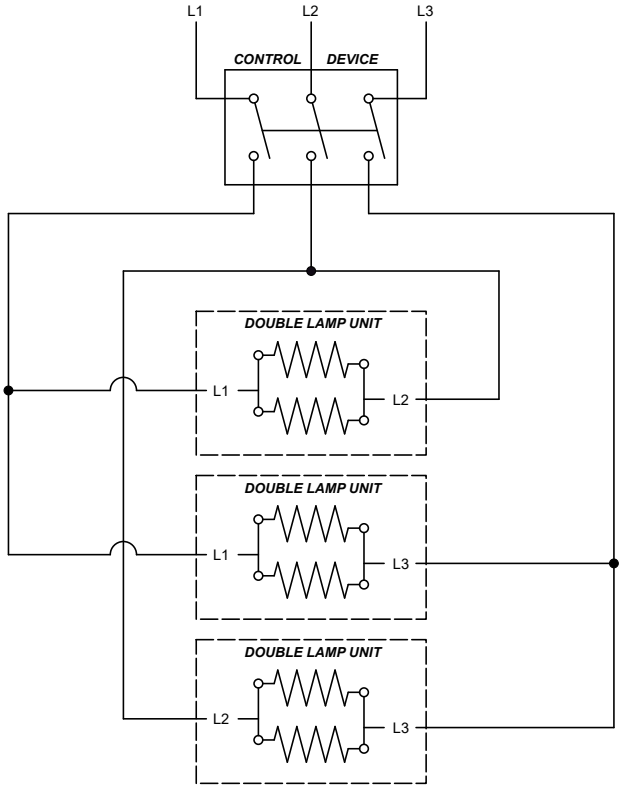


DETROIT RADIANT PRODUCTS COMPANY
Detroit Radiant Products
21400 Hoover Rd.
Warren, MI 48089
Phone: (586) 756-0950
Email: sales@drp-co.com
www.reverberray.com

# HOT RHOD HEATER SUBMITTAL SHEET

## HRE SERIES HIGH INTENSITY HEATERS

### SINGLE AND DUAL ELEMENT ELECTRIC INFRARED HEATERS

ELECTRIC RADIANT HEATERS

A. Basis-of-Design Product: Subject to compliance with requirements, provide Detroit Radiant Products Company; Hot Rhod HRE Series.
B. Electric heaters must be UL Listed to operate at the designated rating of _____ kW/h.
C. Heaters shall operate in given voltages:

| Volt | Phase | Hertz |
|---|---|---|
| 120 | 1 | 50/60 |
| 208 | 1 or 3 | 50/60 |
| 240 | 1 or 3 | 50/60 |
| 277 | 1 or 3 | 50/60 |
| 480 | 1 or 3 | 50/60 |
| 575 | 1 or 3 | 50/60 |

D. Heaters shall operate in given wattage inputs of 750 to 8,000 W.
E. Heater housing shall be constructed of black powder-coated marine grade aluminum.
F. Heater shall include high-temperature nylon louvered end caps. Nylon material shall have V-0 and 5VA flame class ratings, a 100°C minimum RTI, and comply with impact and mold stress-relief tests of UL 746C.
G. Reflector shall have a multi-faceted design and be constructed of polished aluminum for the purpose of efficiently directly radiant heat.
H. Busbar shall be made of 316 marine grade stainless steel.
I. Heater shall include one (1) or two (2) lamp elements. Lamp element tubing shall be a clear quartz tube with [medium wave] [high-output medium wave] output. Metal sheath types shall not be permitted.
J. Protective grill shall be black powder-coated marine grade aluminum or 316 marine grade stainless steel.
K. Factory supplied mounting brackets shall accommodate for sidewall or ceiling mounting.

DETROIT RADIANT PRODUCTS COMPANY
Detroit Radiant Products
21400 Hoover Rd.
Warren, MI 48089
Phone: (586) 756-0950
Email: sales@drp-co.com
www.reverberray.com